T-Plug for Signal Extraction

wenglor
the innovative family

OPT70N

Part Number

Technical Data

Electrical Data	
Signal Extraction	yes
Mechanical Data	
Connection Type	Socket, Plug
Torque	0,8 Nm
Coding	A-coding
Version	angled
Degree of Protection	IP68
Temperature Range	-25...90 °C
Material Cap Nut	CuZn
Packaging unit	1 Piece
Connection Diagram No.	S11
Connection Technology No.	2 21

- **With fixing holes**

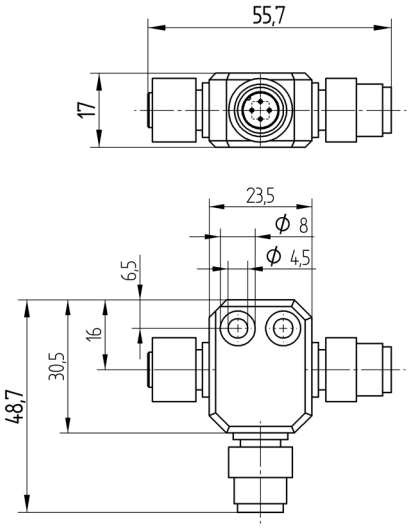

All dimensions in mm (1 mm = 0.03937 Inch)

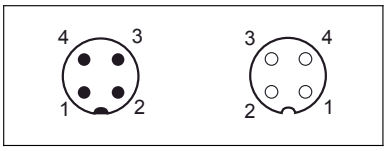

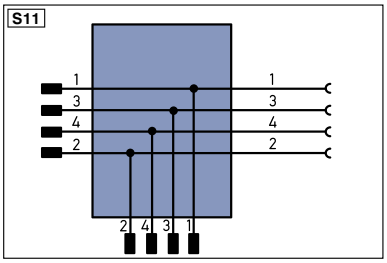

Legend

+	Supply Voltage +
–	Supply Voltage 0 V
~	Supply Voltage (AC Voltage)
A	Switching Output (NO)
Ā	Switching Output (NC)
V	Contamination/Error Output (NO)
V̄	Contamination/Error Output (NC)
E	Input (analog or digital)
T	Teach Input
Z	Time Delay (activation)
S	Shielding
RxD	Interface Receive Path
TxD	Interface Send Path
RDY	Ready
GND	Ground
CL	Clock
E/A	Output/Input programmable
	IO-Link
PoE	Power over Ethernet
IN	Safety Input
OSSD	Safety Output
Signal	Signal Output
BI_D+/-	Ethernet Gigabit bidirect. data line (A-D)
ENo RS422	Encoder 0-pulse 0-0̄ (TTL)
PT	Platinum measuring resistor
nc	not connected
U	Test Input
Ū	Test Input inverted
W	Trigger Input
O	Analog Output
O–	Ground for the Analog Output
BZ	Block Discharge
AMV	Valve Output
a	Valve Control Output +
b	Valve Control Output 0 V
SY	Synchronization
E+	Receiver-Line
S+	Emitter-Line
⏚	Grounding
SnR	Switching Distance Reduction
Rx+/–	Ethernet Receive Path
Tx+/–	Ethernet Send Path
Bus	Interfaces-Bus A(+)/B(–)
La	Emitted Light disengageable
Mag	Magnet activation
RES	Input confirmation
EDM	Contactor Monitoring
ENA RS422	Encoder A/Ā (TTL)
ENB RS422	Encoder B/B̄ (TTL)
ENA	Encoder A
ENB	Encoder B
AMIN	Digital output MIN
AMAX	Digital output MAX
AOK	Digital output OK
SY In	Synchronization In
SY OUT	Synchronization OUT
OUT	Brightness output
M	Maintenance

Wire Colors according to DIN IEC 757

BK	Black
BN	Brown
RD	Red
OG	Orange
YE	Yellow
GN	Green
BU	Blue
VT	Violet
GY	Grey
WH	White
PK	Pink
GNYE	Green/Yellow

Specifications are subject to change without notice