Three-way globe mixing valves

VM - 3V

CE In compliance with 97/23/CE PED

USE

VM-3V series valves are used to control fluids belonging to the group showed in the table in accordance to article 9 of 97/23/CE (PED) directive, in air-conditioning, thermoventilation and heating plants and in industrial processes; therefore, they cannot be used as safety valves.

MANUFACTURING CHARACTERISTICS

They consist in a 3-way valve body to be assembled on electrical bidirectional actuator, driving mechanical connection with elastic pin and position indicator.

MOTORIZED VALVES TECHNICAL CHARACTERISTICS AND PERFORMANCES

	VMB16 DN25÷150	**VMS DN25÷65 3VSA DN80**	**VMSTS DN25÷65 3VSATS DN80**	**3VAA DN25÷125**	**3VAACP DN25÷125**
Construction	PN16	PN25	PN25(3)	PN40(7)	PN40(7)
Body	cast iron	spher. cast iron	spher. cast iron	steel	steel
Seat	as above	stainless steel	stainless steel	stainless steel	stainless steel
Plug	forged brass	as above	as above	as above	as above
Stem (Ø 9mm.)	stainless steel	stainless steel	stainless steel	stainless steel	stainless steel
Control characteristic	direct way=equal perc. angle way= linear	direct way=equalp.(DN25÷65) linear (DN80) angle way= linear	direct way=equalp.(DN25÷65) linear (DN80) angle way= linear	linear	linear
Stem packing	Viton O-ring(5)	Teflon V-ring	stainl. steel bellows	Teflon V-ring	(2)
Max fluid temp.°C	150	230	300	230	350
Min fluid temp. °C	-10(1)	-10(1)	-10(1)	-10(1)	-20(1)(4)
Fluid (6)	Group 2	Group 2	Group 1	Group 2	Group 1
Connections	flanged PN16	flanged PN25	flanged PN25	flanged PN40	flanged PN40
Leakage Kvs %	direct way 0,03 angle way 2	0,02	0,02	0,02	0,02

(1) For applications with possible ice formation on stem and packing, see 245 accessory.
(2) Graphite packing for high temperatures; forced lubrication on extended neck. Teflon packing for low temperatures, see (4).
(3) Due to the bellows presence, the max applicable pressure must not be higher than 5 bar
(4) For applications on fluids from -10 to -20 °C add letter B to the model name, e.g. 3VAACP50B. In such case the max temperature is 230°C
(5) Double O-ring and graphite teflon scraper ring.
(6) Group 1: water, overheated water, steam, diathermic oil.
For different fluids belonging to group 1, please contact our Sales Support.
Group 2: water, overheated water, steam.
For different fluids belonging to group 2, please contact our Sales Support
(7) PN25 only for 3VAA125 and 3VAACP125

CONTROLLI
ISO 9000
CONTROLLI
16010 SANT'OLCESE Genova - Italy
Tel.: +39 01073061 Fax: +39 0107306870/871
E-mail: info@controlli.org Web: www.controlli.org

*MAX DIFFERENTIAL AND CLOSE-OFF PRESSURE (bar) ****

DN	Kvs			VMB16					VMS				
mm	VMB16	VMS	3V	SH/ST	MVL	MVLA/C*	MVF58	MVF515	SH/ST	MVL	MVLA/C*	MVF58	MVF515
25R	4	4	4	15,5	16	8,1	9	16	25	25	12	14	25
25I	6,3	6,3	6,3	15,5	16	8,1	9	16	14,5	17	6	7	17
25	10	10	10	15,5	16	8,1	9	16	14,5	17	6	7	17
32	-	19	16	-	-	-	-	-	9,5	11,5	4	4,5	11,5
40R	19	-	-	8,7	10	4,6	5,2	10	-	-	-	-	-
40	25	25	22	8,7	10	4,6	5,2	10	7	8	2,8	3,2	8
50	40	40	32	5,6	6,5	3	3,4	6,5	4,5	5	1,8	2	5
65	63	63	70	3,3	3,8	1,7	2	3,8	2,5	3	1	1,1	3
80	100	-	110	2,1	2,5	1,1	1,2	2,5	-	-	-	-	-
100	130	-	140	1,4	1,6	0,7	0,8	1,6	-	-	-	-	-
125	200	-	250	0,9**	1	0,4	0,4	1	-	-	-	-	-
150	300	-	-	0,6**	0,7	0,3	0,3	0,7	-	-	-	-	-

DN	Kvs			VMSTS				3VSA				
mm	VMB16	VMS	3V	MVL	MVLA/C*	MVF58	MVF515	SH/ST	MVL	MVLA/C*	MVF58	MVF515
25R	4	4	4	5	5	5	5	-	-	-	-	-
25I	6,3	6,3	6,3	5	5	5	5	-	-	-	-	-
25	10	10	10	5	5	5	5	-	-	-	-	-
32	-	19	16	5	5	5	5	-	-	-	-	-
40R	19	-	-	-	-	-	-	-	-	-	-	-
40	25	25	22	5	3,8	4,3	5	-	-	-	-	-
50	40	40	32	5	2,4	2,7	5	-	-	-	-	-
65	63	63	70	3,5	1,3	1,5	3,5	-	-	-	-	-
80	100	-	110	-	-	-	-	1,9	2,2	0,9	1	2,2
100	130	-	140	-	-	-	-	-	-	-	-	-
125	200	-	250	-	-	-	-	-	-	-	-	-
150	300	-	-	-	-	-	-	-	-	-	-	-

DN	Kvs			3VSATS				3VAA/3VAACP			
mm	VMB16	VMS	3V	MVL	MVLA/C*	MVF58	MVF515	MVL	MVLA/C*	MVF58	MVF515
25R	4	4	4	-	-	-	-	19	7	8	19
25I	6,3	6,3	6,3	-	-	-	-	19	7	8	19
25	10	10	10	-	-	-	-	19	7	8	19
32	-	19	16	-	-	-	-	12	4,3	5	12
40R	19	-	-	-	-	-	-	-	-	-	-
40	25	25	22	-	-	-	-	7,5	2,8	3,2	7,5
50	40	40	32	-	-	-	-	5,5	1,9	2,2	5,5
65	63	63	70	-	-	-	-	3,2	1,1	1,2	3,2
80	100	-	110	2,2	0,8	0,9	2,2	2	0,7	0,8	2
100	130	-	140	-	-	-	-	1,3	0,4	0,4	1,3
125	200	-	250	-	-	-	-	0,8	0,3	0,3	0,8
150	300	-	-	-	-	-	-	-	-	-	-

NOTE In order to avoid wear between plug and seat, we recommend not to overcome the differential pressure as follows:
VMB16 = 2 bar
VMS = 8 bar
3VAA/3VAACP = 12 bar

Kvs is the flow rate expressed in m^3/h of water at a temperature between 5 °C and 40°C passing through a valve open at the nominal stroke with 100 kPa (1 bar) differential pressure.
* MVLA in emergency closes direct way; MVLC in emergency opens direct way.
** Only for ST actuator.

Note The max operating pressures at different temperatures for PN various classes must correspond to the UNI 1284 table.

MVL56F

CE

MODEL	STROKE TIME FOR CONTROLLI VALVES			POWER SUPPLY (Vac)	CONTROL
	16,5 mm	25 mm	45 mm		
MVL56F	26 s	40 s	70 s	24 V	proportional
	300/60 s	300/60 s	300/60 s		floating

APPLICATION AND USE

MVL actuators have linear characteristic (linear ratio between input signal and valve coupling joint movement). They are used for fluid control in air-conditioning and heating systems and in industrial processes. The control signal can be set as proportional or floating by acting on the dip switches. They are designed for direct coupling on all CONTROLLI globe valves and they may also be used easily on other manufacturers' valves having a stroke between 9 and 50 mm.

OPERATION

The actuators are equipped with bidirectional electrical motor, they self-adjust according to the valve stroke, granting a constant torque at the valve mechanical stroke ends regardless of their position.
All models are also provided with a feedback output signal indicating the valve position.

MANUFACTURING CHARACTERISTICS

The actuator consists in a die-cast aluminium housing, which includes mounting bracket for connection to valve body.
Reduction gears supported by ball bearings. Movement is transmitted to a rack-and-pinion mechanism connected to the valve stem through a suitable joint.
Internal electronic card with easily accessible terminals for electrical connections.
The manual control knob is placed on the front part of the actuator; the knob is in thermoplastic material.
The actuator is maintenance-free.

POSSIBLE COMBINATIONS AND CONNECTIONS

The actuator can be connected to any controller, providing that the relevant output signal complies with the requirements at "Technical Characteristics" paragraph. In particular it can be connected to CONTROLLI 500-line controllers.

TECHNICAL CHARACTERISTICS

Power supply	24 Vac, ±10%
Consumption	12 VA
Dimensioning	15 VA
Frequency	50...60 Hz
Stroke	9...50 mm
Stroke time	See available models
Force	1500 N
Temperature	
- operating	-15T 50 °C
- storage	-25T 65°C
Allowed room humidity	Class R according to DIN 40040
Terminal board	screw-type 1,5 mm^2 wires
N. 2 conduit opening	plastic punchable, replaceable by PG 13,5 compression glands
Protection degree	IP 55 DIN 40050 (IEC 529) For highly polluted environments according to IEC 730-1(93)/6.5.3
Weight	4 Kg
Control signal	
Floating	2 SPST contacts
Proportional	
- voltage	0...10V (factory setting), 2...10V/ 4...7V/8...11V/1...5V/6...9V
-current	see MVLFS5 accessory
Output indication	
G0-Y	2...10 Vdc (max 2 mA)
Voltage outside power supply output	
G0-G1	16 Vdc (max 25 mA)

The product complies with EMC 2004/108/CE directive according to the following standards: EN50081-1 for emission, EN50082-1 for immunity.

CONTROLLI
ISO 9000

CONTROLLI
16010 SANT'OLCESE Genova - Italy
Tel.: +39 01073061 Fax: +39 0107306870/871
E-mail: info@controlli.org Web: www.controlli.org

ACCESSORIES

DMVL **(only factory-mounted. To be ordered together with the actuator)**.
2 auxiliary microswitches (SPDT 10 (3) A-250V~) adjustable on the whole stroke. Microdisconnection type 1B according to IEC 730-1(93)/ 6.4.3.2. It is possible to place the cams so that the microswitches act according to the required position. Keep in mind that when the lever is on the cam protruding part, the contact is closed between b and c and open between c and a (see figure below).

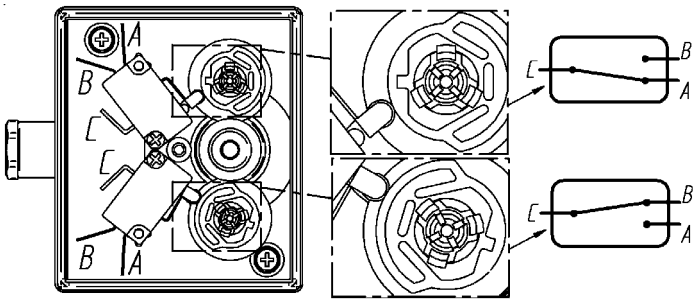

Make the electrical connections in compliance with the rules in force.
Attention: during operation, the cables must not interfere with the cams and the gears.

DMVF 2 stroke end microswitches with electronic control, not adjustable.

MVLFS5 Accessory for 4÷20 mA control signal.
This accessory is factory-supplie with the actuator.

MVLHT Valve body-actuator spacer reducing the actuator direct exposure in case of installation with high-temperature fluids.
Dimensions: Ø 120 mm; h = actuator height + 102 mm

245 Stem heater 24 V~, 50 W (for applications with fluid temperature <-10 °C)

AG31 Assembling kit for VMB and VSB valves.

INSTALLATION AND MOUNTING

The actuator can be mounted in the positions shown in Fig. 3. It is advisable to use the motorized valve with MVLHT spacer in order to reduce the actuator working temperature in case of fluids at high temperatures (approximately > 120° C) in the valve body. For fluids over 160°C avoid mounting the actuator in vertical position on the valve so as to avoid the direct exposure to heat sources.
Carry out the electrical connections by removing the cover, in compliance with the rules in force. For valve mounting, follow the assembly instructions inside the package.
These actuators are factory-supplied with 0...10 V- control signal. To select different ranges, move the “DIP” microswitches (see fig. 1 and 2).
For 4...20 mA range it is necessary to select 2...10 V range and mount the resistance as shown on installation instructions of the actuator.
To reverse the action direction, move the DIP 7 from OFF to ON.

ELECTRONIC BOARD

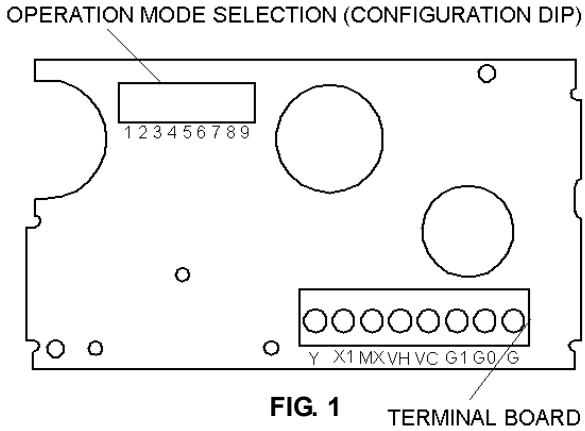

FIG. 1

WIRING DIAGRAMS

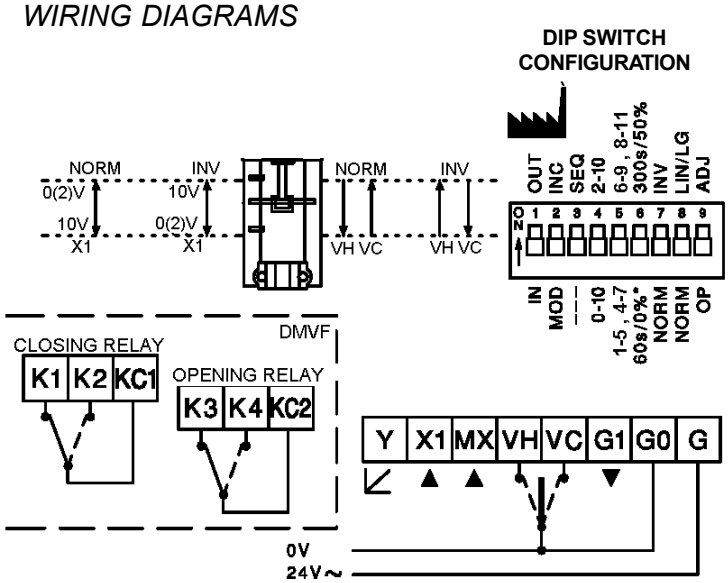

FIG. 2

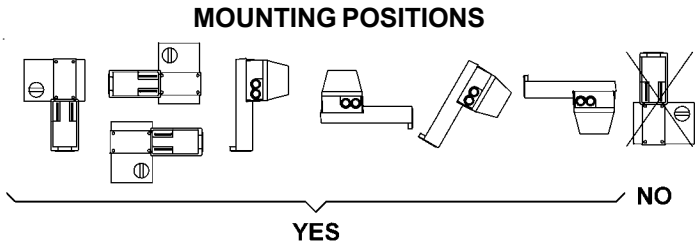

FIG. 3

OVERALL DIMENSIONS (mm)

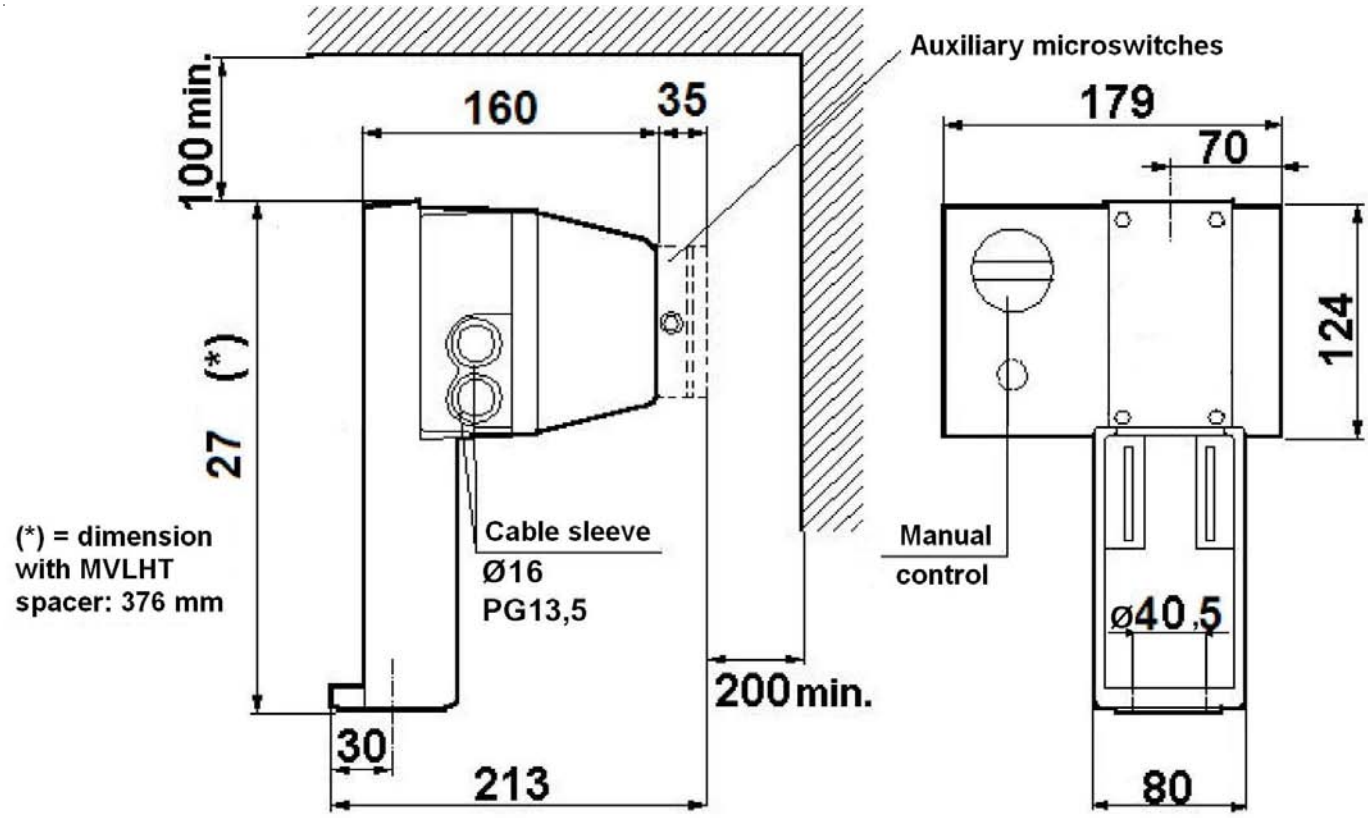

The performance stated in this sheet can be modified without any prior notice due to design improvement.

ACTUATORS TECHNICAL CHARACTERISTICS, WIRING DIAGRAMS AND INSTALLATION

See SH - ST - MVL actuators data sheets and mounting instructions.

MOTORIZED VALVES OPTIONS

MODEL DESCRIPTION

A125-3 flanges with ANSI125 bolt holes (for VMS DN25÷65, 3VSA DN80)
A150-3 flanges with ANSI 150 bolt holes (for 3VAA valves)
A300-3 flanges with ANSI 300 bolt holes (for 3VAA valves)

INSTALLATION

HYDRAULIC CONNECTIONS

Respect the fluid direction as indicated in Fig. 1 and 2. In particular, we specify that the valves must be mounted as mixing valves with inlet in A and in B and outlet AB.

VALVE MOUNTING

Before mounting the valve, make sure pipes are clean, free from welding slags. The pipes must be perfectly aligned with the valve body and not subjected to vibrations.
For installations on plants with high temperature fluids (steam, overheated water, diathermic oil) use expansion joints to avoid the dilatation of pipes to overload the valve body.

Install the valves with the actuator in vertical position for fluid temperature up to 120°C, with higher temperatures they must be mounted horizontally.

NOTE: Following the hydraulic installation it is necessary to check the tight of the stem packing placed on the bonnet, both in cases of low and high temperatures. The valves require periodic maintenance.

The valves can also be mounted in any other position provided that the actuator main shaft is always horizontal.

Leave sufficient room over the actuator, at least 10 cm., to allow the actuator disassembling from the valve body for eventual maintenance.
The actuator must not be installed in explosive atmosphere, at a room temperature lower than -5 and higher than 50 °C; they must not be subjected to steam or water jets or dripping.

Avoid the valve installation in plants, which are considered aggressive and/or corrosive for valve materials.

Please contact our Sales Support in order to determine which potentially aggressive or polluting substances can be used.

We disclaim all responsibility in case of valve failure due to external fortuitous events (fire, earthquakes etc.).

Note: The actuator can be rotated with respect to the valve body by blocking the ring nut; after such operation re-tighten the ring nut.

Attention: The stem of 3VSATS bellows seal valves must never rotate with respect to the valve body it is connected to through the bellows.

ACCESSORIES

MODEL DESCRIPTION

245 stem heater for applications on -10 °C low temperature fluid with SH - ST - MVL actuators.
AG50 Adapter for VMB16 valves with MVF actuator (for 16,5-25 mm stroke)
AG51 Adapter VMB16 valves with MVF actuator (for 45 mm stroke) and 3V/VMS (any stroke)

APPLICATION SCHEMES

Constant flow mixing to the user

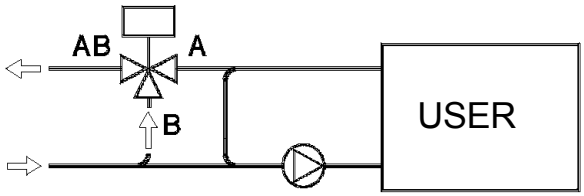

N4097

FIG. 1

Variable flow mixing to the user

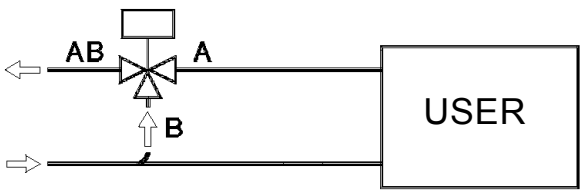

FIG. 2

OVERALL DIMENSIONS (mm)

Figure	Model	DN	L	H	h	Ø D	b	Ø d	Ø f	Holes	Weight Kg.	Stroke mm	Stem Ø mm
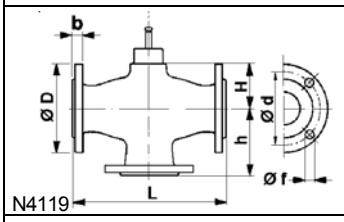 N4119	**VMB16** (PN16)	25	160	37	80	115	16	85	14	4	5,2	16,5	9
		40	200	51	100	150	18	110	18	4	9,4	25	
		50	230	53	115	165	20	125	18	4	14	25	
		65	290	71	145	185	20	145	18	4	19,1	25	
		80	310	81	155	200	22	160	18	8	23,5	45	
		100	350	93	175	220	22	180	18	8	32	45	
		125	400	115	200	250	24	210	18	8	45,6	45	
		150	480	133	240	285	24	240	22	8	61,2	45	
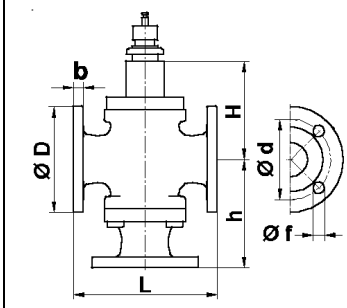 N4095 **VMS/3VSA/3VAA**	**VMS** (PN25)	25	160	103	137	115	18	85	14	4	8	16,5	12
		32	180	113	159	140	20	100	18	4	12	25	
		40	200	116	162	150	20	110	18	4	14	25	
		50	230	119	171	165	22	125	18	4	18	25	
		65	270	130	190	185	24	145	18	8	25	25	
	3VSA (PN25)	80	310	166	207	200	26	160	18	8	42,8	45	9
	3VAA (PN40)	25	160	132	140	115	17	85	14	4	12,4	16,5	9
		32	180	147	157	140	17	100	18	4	18,2	25	9
		40	200	150	160	150	17	110	18	4	21,6	25	9
		50	230	153	172	165	19	125	18	4	26	25	9
		65	270	169	190	185	21	145	18	8	36	25	9
		80	310	182	207	200	23	160	18	8	47,8	45	9
		100	350	163	247	235	24	190	22	8	55	45	12
		125	400	182	282	270	26	220	25	8	78	45	12
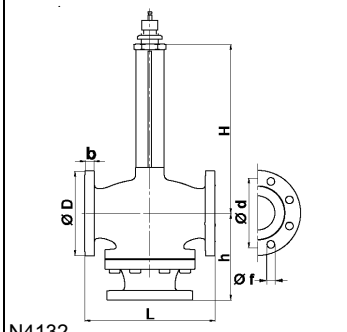 N4132 **VMSTS/3VSATS/3VAACP**	**VMSTS** (PN25)	25	160	258	137	115	18	85	14	4	10	16,5	12
		32	180	264	159	140	20	100	18	4	15	25	
		40	200	265	162	150	20	110	18	4	17	25	
		50	230	274	171	165	22	125	18	4	21	25	
		65	270	284	191	185	24	145	18	8	29	25	
	3VSATS (PN25)	80	310	397	207	200	26	160	18	8	45,6	45	9
	3VAACP (PN40)	25	160	257	140	115	18	85	14	4	15,7	16,5	9
		32	180	272	157	140	18	100	18	4	22,3	25	9
		40	200	275	160	150	18	110	18	4	25	25	9
		50	230	276	172	165	20	125	18	4	29,7	25	9
		65	270	294	190	185	22	145	18	8	39,3	25	9
		80	310	307	207	200	24	160	18	8	50,8	45	9
		100	350	288	247	235	24	190	22	8	67	45	12
		125	400	311	282	270	26	220	25	8	98,6	45	12

The performances stated in this sheet can be modified without any prior notice due to design improvements